SPEAKMAN® S-2005-HB

Hotel Shower Head

FEATURES:

- 5 plungers, 50 sprays
- 8 center massage jets
- Durable plastic construction
- Spray adjusting handle
- Patented plungers resist scale buildup
- 1/2 in. NPT inlet
- 2.5 gpm (9.5 L/min) flow rate

FINISH:

PC BN PB BC

OPTIONS: Add suffix to model

- 2.0 gpm (7.6 L/min) flow rate ❑ -E2

COMPLIANCE:

- ASME A112.18.1/CSA B125.1 compliant
- WaterSense certified (E2)

WARRANTY:

- Limited Lifetime Warranty (consumer use)
- 1 Year Limited (commerical use)

DIMENSIONS: NOTE: 1. All dimensions are in inches (millimeters) unless otherwise specified and are subject to change without notice.

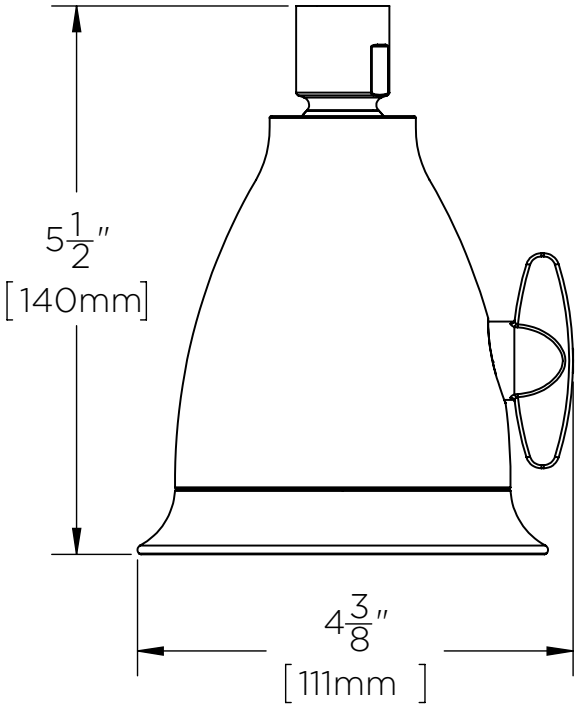

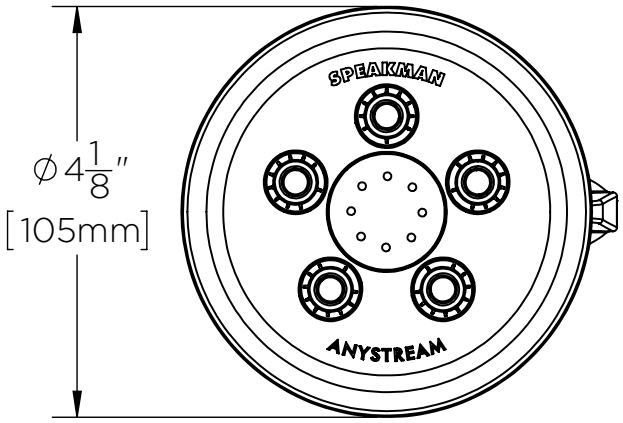

Architect/Engineer Approval Space:

SPEAKMAN
400 ANCHOR MILL ROAD
NEW CASTLE, DE 19720

P: 800-537-2107
F: 800-977-2747
W: WWW.SPEAKMAN.COM
R: AUGUST 2016

Management Systems Registered to ISO 9001